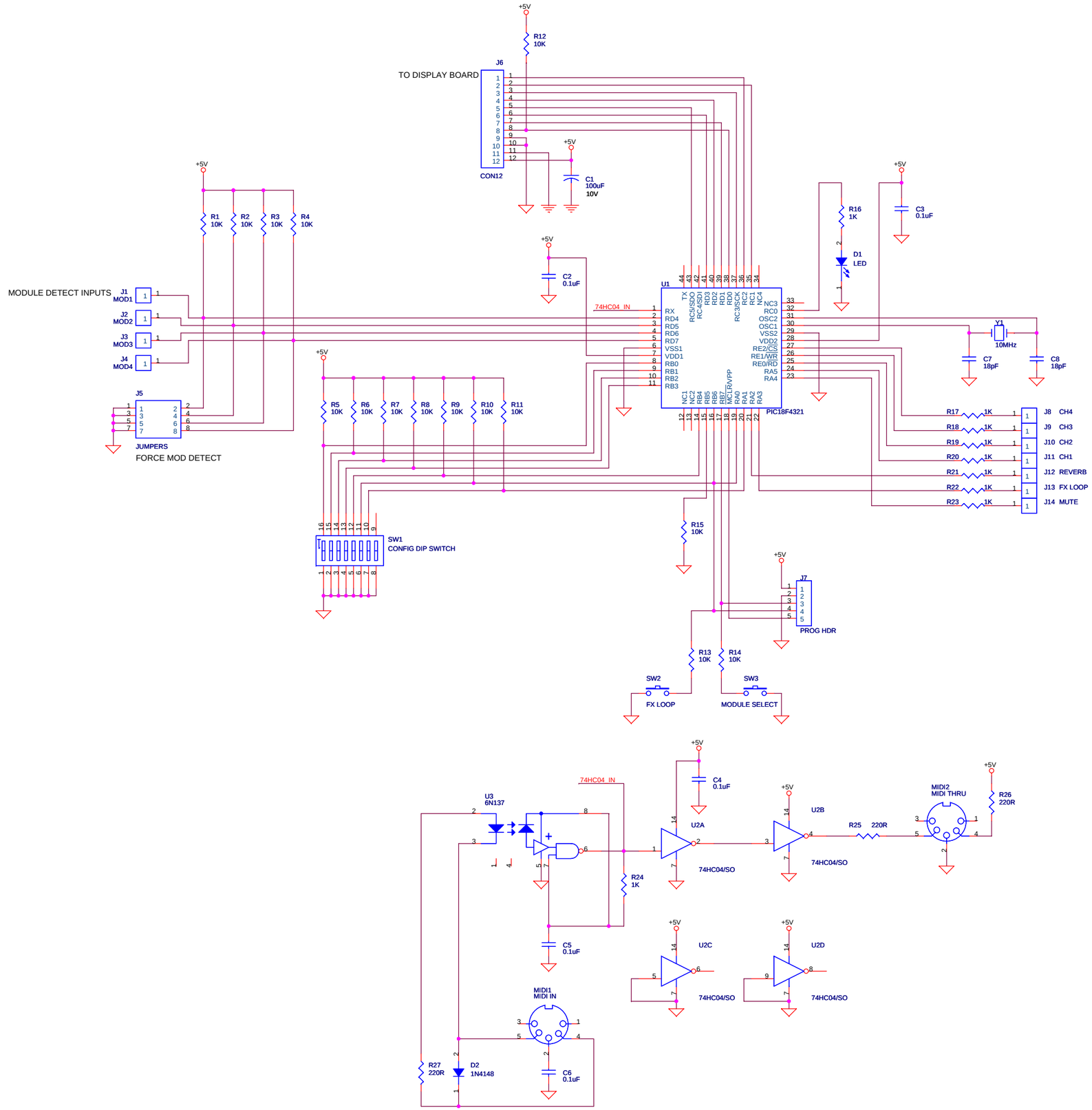

malibu technologies, inc.

48700 Structural Drive
Chesterfield, MI 48051
586.598.9900

Title	Egnater MIDI 2	
Size C	Document Number <Doc>	Rev A
Date: Wednesday, December 26, 2007	Sheet 1 of 1	